# TASK 2

## Task 2A: EV POWERTRAIN DIAGRAM AND ENERGY FLOW:

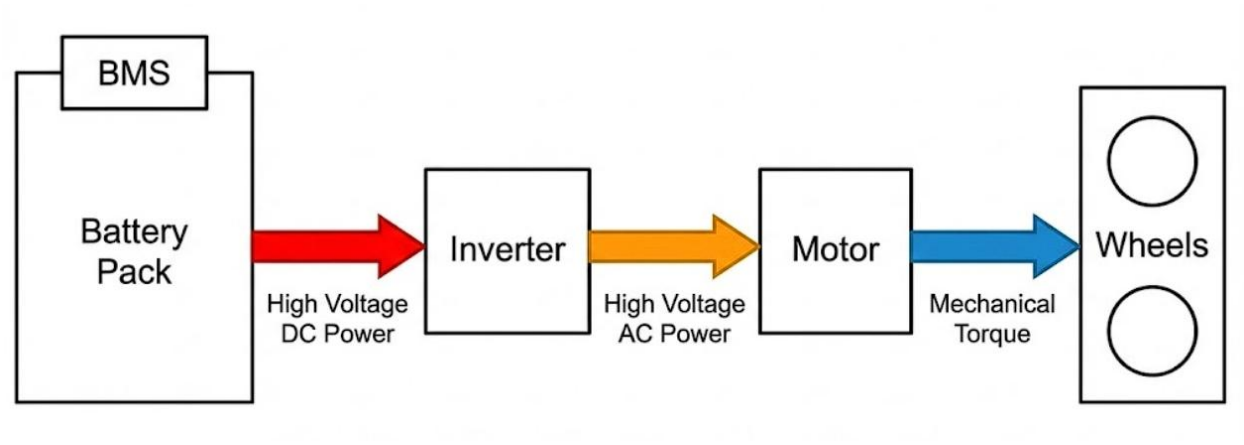


❖ **Battery Pack (with BMS)**

**Stores chemical energy → releases as High Voltage DC Power**

- Battery Pack is the energy source of the EV
- BMS (Battery Management System) **monitors & controls** the battery — protecting it from overcharge, overheating, and cell imbalance
- Outputs **High Voltage DC** (typically 400V–800V)

❖ **Inverter**

**High Voltage DC → High Voltage AC Power**

- Converts the DC electricity from the battery into **variable-frequency AC power**
- By changing frequency, it controls **motor speed and torque**
- It's the brain of power delivery

❖ **Step 3 — Motor**

**High Voltage AC → Mechanical Torque**

- AC power spins the motor, generating **mechanical torque**
- This rotational force is transferred directly to the drivetrain

❖ **Step 4 — Wheels**

**Mechanical Torque → Vehicle Motion**

- Torque from the motor drives the wheels
- Vehicle **propels forward**

### Energy Flow Explanation:

The Battery Pack stores chemical energy and releases it as DC electricity, monitored and controlled by the BMS. The Inverter converts this DC power into variable-frequency AC power, which drives the Motor.

The Motor converts the electrical energy into mechanical torque, which is then transferred to the Wheels to propel the vehicle.

## Task 2B: Motor Type Case Study

**EV:** Tata Nexon EV

- **Motor Type:** Permanent Magnet Synchronous Motor (PMSM)
- **Power:** 106.4 kW (approx. 143 hp)
- **Torque:** 215 Nm

**Why that motor type was chosen:** Manufacturers like Tata Motors choose the **PMSM (Permanent Magnet Synchronous Motor)** for the Nexon EV primarily for its **efficiency** and **power density**.

- **High Efficiency:** PMSM motors are highly efficient (often above 90%), which is critical for maximizing the driving range of the battery.
- **Compact Size:** They offer a high power-to-weight ratio, meaning they can deliver substantial power without taking up too much space or adding excessive weight to the vehicle.
- **Torque Delivery:** They provide excellent torque at low speeds, which gives the EV its characteristic "instant acceleration" feel.
- **Regenerative Braking:** This motor type effectively acts as a generator during deceleration, recovering energy to recharge the battery.

### Power & Performance Specs

| Specification | Nexon EV Prime | Nexon EV Max |
|---|---|---|
| Motor Type | PMSM | PMSM |
| Power Output | 95 kW (127 hp) | 127 kW (170 hp) |
| Peak Torque | 245 Nm | 245 Nm |
| 0–100 km/h | ~9.9 sec | ~8.9 sec |
| Top Speed | 120 km/h | 150 km/h |
| Battery | 30.2 kWh | 40.5 kWh |
| Range (ARAI) | 312 km | 437 km |

- 

**Why PMSM WAS CHOOSEN ON NEXON EV?**

| REASON | EXPLANATION |
|---|---|
| High Efficiency | 93-95% efficiency V/S 85% in induction motors. |
| Instant Torque | Full 245 Nm available from 0 RPM. |
| Compact Design | High Power Density- Small size, big output. |
| No Brushes | Zero brush friction=low maintenance. |
| Better Control | Precise speed & torque control via inverter. |
| Low noise | Smooth, silent operation-NVH advantage. |

**Business/Market Reasons:**

| Reason | Explanation |
|---|---|
| Cost Suitable | Affordable for Indian mass market |
| Local Conditions | Handles stop-start city traffic efficiently |
| Reliability | Simple construction = fewer failure points |
| Made in India | Aligns with Tata's local manufacturing goals |

**Task 2C: BMS Safety Study**

**What is BMS?**

**Battery Management System (BMS)** is the electronic "brain" that monitors, protects, and manages the EV battery pack at all times — ensuring safe and efficient operation.

**1. Battery Safety Issues**

EV batteries (Li-ion) are powerful but can be dangerous if not managed properly. Key safety issues include:

| Safety Issue | Cause | Risk |
|---|---|---|
| **Overcharging** | Charging beyond max voltage | Fire / explosion |
| **Over-discharging** | Draining below min voltage | Cell damage / failure |
| **Overcurrent** | Too much current flow | Heat buildup, short circuit |
| **Overheating** | High temp during charge/drive | Cell degradation, fire |
| **Cell Imbalance** | Unequal charge in cells | Reduced range, cell failure |
| **Short Circuit** | Internal/external fault | Immediate fire hazard |
| **Physical Damage** | Accident / puncture | Electrolyte leakage, fire |

**What is Thermal Runaway?**

A **dangerous chain reaction** inside battery cells where heat generates more heat — leading to fire or explosion that is very difficult to stop.

**How it Happens (Step by Step):**

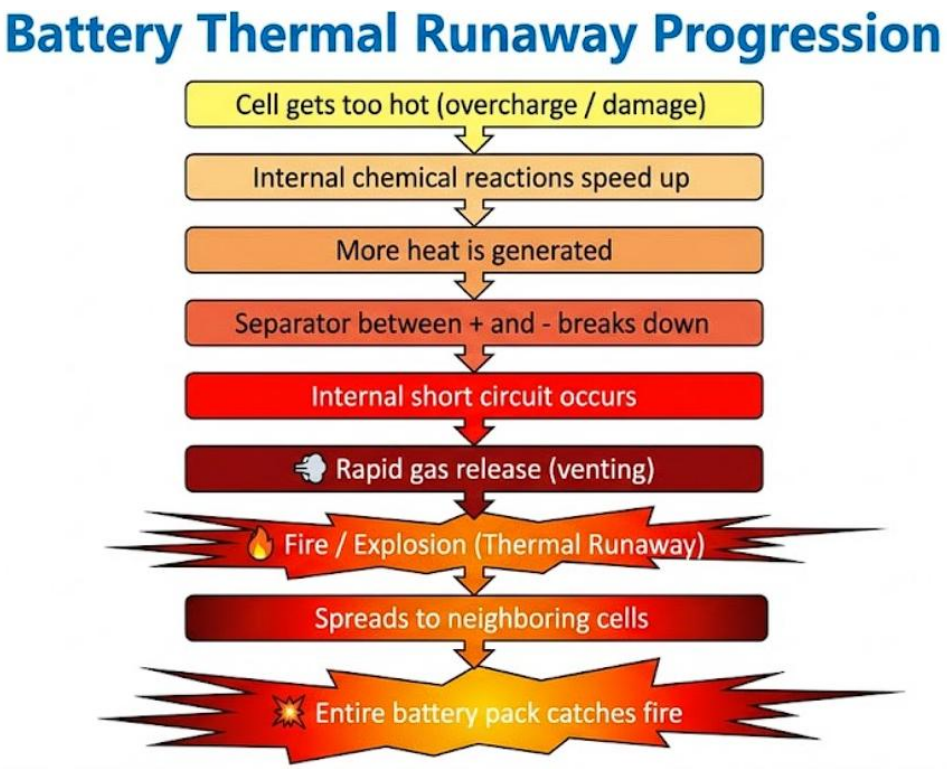


**Triggers of Thermal Runaway:**

- Temperature above **60°C**
- Overcharging beyond cell voltage limit
- Physical puncture or crash damage
- Manufacturing defects in cells
- Fast charging at extreme temperatures

**Why It's Dangerous:**

- Burns at **very high temperature (400–700°C)**
- Releases **toxic gases** (HF, CO)
- **Self-sustaining** — hard to extinguish
- Can spread cell-to-cell in seconds

**3. How BMS Prevents Failures**

BMS uses **real-time monitoring + protective actions** to prevent all above issues:

**A) Continuous Monitoring**

| Parameter | BMS Action |
|---|---|
| Cell Voltage | Monitors every cell — cuts off if too high/low |
| Temperature | Sensors on each module — activates cooling |
| Current | Measures charge/discharge current constantly |
| State of Charge (SOC) | Calculates remaining battery % accurately |
| State of Health (SOH) | Tracks battery aging & capacity loss |

**B) Protection Functions**

| Function | How BMS Does It |
|---|---|
| Overcharge Protection | Cuts charging when voltage limit reached |
| Over-discharge Protection | Shuts down before battery fully drains |
| Overcurrent Protection | Trips circuit breaker on excess current |
| Thermal Protection | Activates liquid cooling / reduces power |
| Cell Balancing | Redistributes charge equally across all cells |

\

**C) Cell Balancing (Special Feature)**

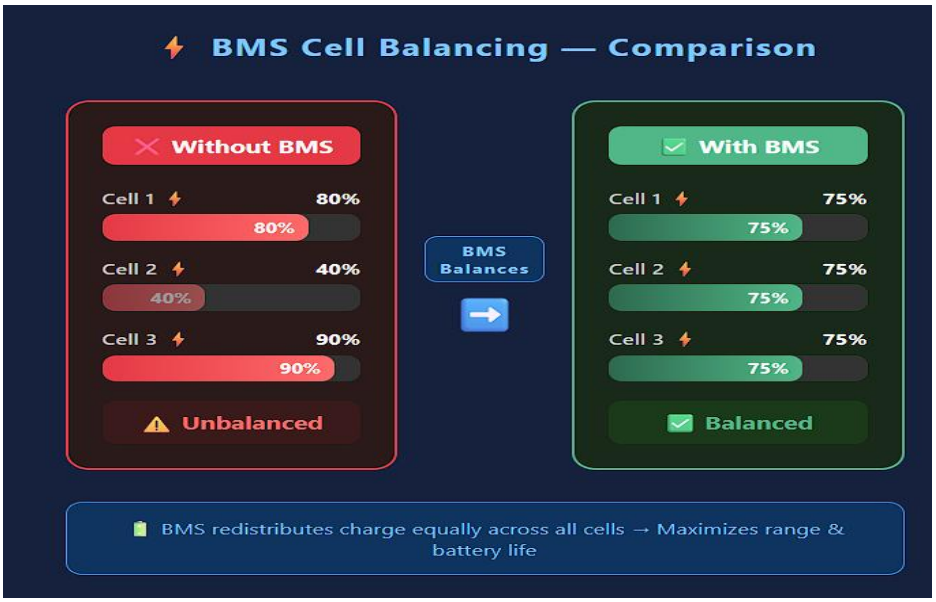


**BMS Safety Summary:**

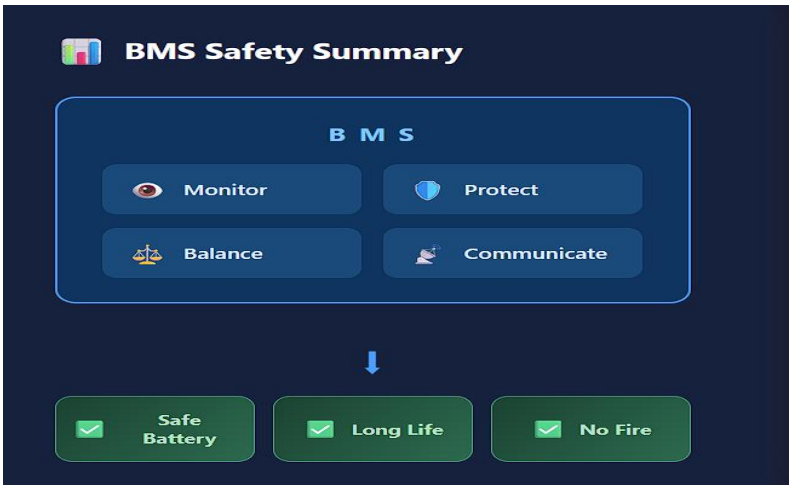


**Conclusion**

The **BMS is the most critical safety component** in any EV. Without it, Li-ion batteries would be extremely dangerous. By continuously monitoring voltage, temperature, and current — and taking instant protective action — the BMS **prevents thermal runaway, extends battery life, and ensures passenger safety** at all times. It is truly the **guardian of the EV battery.**